VISVESVARAYA TECHNOLOGICAL UNIVERSITY

BELAGAVI, KARNATAKA

Report on

"Smart energy meter"

Submitted in the partial fulfillment for the award of bachelor degree in Electronics and Communication Engineering

Submitted by

LAKSHMI PRIYA S [1GA22EC124]

Under the Guidance of
Mrs. Bindu K

Asst. Professor Dept. of ECE, GAT

Department of Electronics and Communication Engineering

Global Academy of Technology

BENGALURU – 560098

2024-2025

GLOBAL ACADEMY OF TECHNOLOGY

RAJARAJESHWARI NAGAR, BANGLORE-560098

NAAC – 'A' Grade and NBA Accredited

Department of Electronics and Communication Engineering

CERTIFICATE

Certified that the project (22ECE56) entitled

"Smart energy meter"

Carried out by

LAKSHMI PRIYA S [1GA22EC124]

Bonafide students of Global Academy of Technology in partial fulfillment for the award of Bachelor of Engineering in Electronics and Communication Engineering of the Visvesvaraya Technological University, Belagavi during the academic year 2024-25. It is certified that all corrections/suggestions indicated for Internal Assessment have been incorporated in the Report deposited in the Departmental library. The Mini Project report has been approved as it satisfies the academic requirements in respect of Mini Project work prescribed for the said Degree.

ABSTRACT

Electricity plays a vital role in daily life, and its efficient management is essential to ensure sustainability and prevent energy crises. However, conventional energy meters often fail to provide accurate power consumption data, leading to inefficiencies in energy distribution. Some regions face electricity shortages, while others have surplus power, highlighting the need for better monitoring and management solutions. This project focuses on the implementation of a smart energy meter that accurately measures and monitors electrical parameters in real time. The system integrates with a cloud platform, enabling remote access and periodic monitoring of power consumption data. By leveraging smart meters, users can track their energy usage more effectively, reducing wastage and optimizing power distribution.

The primary objective of this project is to enhance energy management by providing precise consumption data, improving decision-making, and contributing to a more balanced electricity supply system. This approach aims to bridge the gap between power demand and availability, ensuring a more sustainable and efficient use of electrical resources.

ACKNOWLEDGEMENT

The essence of teamwork and unity is indispensable in the journey toward achieving the goal. This project stands as a testament to the collective effort and dedication of both students and staff. Our heartfelt gratitude goes to the mentors, guides, and colleagues who offered their wisdom, time, and expertise, shaping this project into what it is today. "Success is the abstract of hard work and perseverance , but steadfast of all of us encouragement guidance", so we acknowledge all those guidance and encouragement served as a beacon light and crowned our efforts with success.

We are highly indebted to **Dr. Balakrishna**, Principal, Global Academy of Technology, Bengaluru for providing us with the necessary resources and encouragement to pursue this project.

We are grateful to **Dr. Madhavi Mallam**, Professor and Head, Department of Electronics and Communication Engineering, Global Academy of Technology, Bengaluru for her continuous support, valuable insights, and for fostering a conducive environment for learning and innovation within the department.

We are grateful to our guide **Mrs. Bindu K**, Assistant Professor, Department of Electronics and Communication Engineering, Global Academy of Technology, Bengaluru for her constant guidance, expert advice, and timely feedback throughout the project. Her mentorship was instrumental in shaping the direction of our work and ensuring its successful execution.

TABLE OF CONTENTS

Abstract..... i

Acknowledgement..... ii

Table Of Contents iii

List Of Figures iv

CHAPTER 1 Introduction..... 01

1.1 Problem Definition 02

1.2 Objective 02

1.3 Methodology 03

CHAPTER 2 Literature Survey 04

CHAPTER 3 System Implementation 08

3.1 Block Diagram 08

3.2 Components Required.....08

3.2.1 NodeMCU 09

3.2.2 PZEM004T 10

3.2.3 Jumper Wires 11

3.3 Method of Implementation 12

3.3.1 Working 12

3.3.2 Flowchart..... 14

CHAPTER 4 Result Analysis and Discussion 15

4.1 Advantages 16

4.2 Disadvantages 16

4.3 Applications 17

4.4 Conclusion 17

4.5 Future Scope 18

4.6 References..... 19

LIST OF FIGURES

3.1 Block Diagram 08

3.2.1 NodeMCU 09

3.2.2 PZEM004T 10

3.2.3 Jumper Wires 11

3.3.2 Flowchart 16

CHAPTER 1

INTRODUCTION

Electricity is a fundamental necessity in modern life, powering homes, industries, and essential services. However, its efficient utilization and management remain a challenge, as some regions experience surplus electricity while others face deficits. This imbalance highlights the need for accurate power monitoring and improved energy distribution strategies.

Traditional energy meters have limitations in providing real-time and precise power consumption data, making it difficult to estimate and manage electricity demand effectively. As a result, consumers may experience high energy costs, and power grids may struggle with inefficiencies in load distribution. To address these challenges, smart energy meters offer a more advanced solution by accurately measuring electrical parameters and monitoring energy usage.

Smart meters are designed to provide real-time data on electricity consumption, enabling users to track and optimize their power usage. Additionally, integrating these meters with cloud technology allows for remote access and periodic monitoring of consumption data. This not only enhances consumer awareness but also aids in efficient power management and decision-making at a larger scale.

The primary objective of this project is to develop a smart energy meter that provides accurate power consumption data, facilitates remote monitoring, and improves energy efficiency. By implementing this system, users can make informed decisions about their energy usage, reducing waste and promoting a sustainable approach to electricity consumption.

1.1 PROBLEM DEFINITION

Traditional electric meters face challenges like inaccurate billing, lack of real-time data, and limited consumer awareness, leading to inefficiencies, higher operational costs, and energy waste. Develop a Smart Electric Meter that provides real-time, accurate consumption data, improving billing accuracy, enabling energy optimization, and reducing waste for both consumers and utilities.

1.2 OBJECTIVE

1. Real-time Monitoring: Smart meters can send data in real-time or at regular intervals, allowing both consumers and utility providers to track energy usage more precisely.

2. Improved Accuracy: Smart meters minimize human error in reading and billing by automatically recording and transmitting consumption data. This reduces the chances of incorrect billing due to misreading or estimation.

3. Energy Efficiency: By providing detailed usage data, consumers can understand their energy consumption patterns and take steps to reduce waste, leading to more sustainable and efficient energy usage.'

4.Quick Response: enable rapid detection, notification, and resolution of power disruptions by automatically identifying outages, sending real-time alerts to utility providers and customers, and facilitating faster restoration, thereby improving grid reliability and minimizing downtime.

1.3 METHODOLOGY

1. Component Selection & Procurement: Selected PZEM-004T, ESP8266, jumper wires, small breadboard, switch and AC load (bulb). Chose Blynk as the IoT platform for real-time monitoring.

2. Circuit Design & Assembly: Connected AC power supply (110V/230V) to the PZEM-004T. Wired ESP8266 to PZEM-004T via TX/RX UART communication. Integrated switch to control AC load. Passed the live wire through the current coil for current measurement.

3. Powering the System: Used wall outlet as the AC power source. Ensured proper insulation and grounding for safety.

4. Programming the ESP8266: Used Arduino IDE with the Blynk library to send data to the cloud. Configured Wi-Fi credentials for ESP8266 to communicate with Blynk.

5. Testing & Validation: Turned on the system and checked voltage, current, and power readings on Blynk. Verified data accuracy by comparing with a multimeter.

6. Final Integration & Documentation: Ensured stable operation for real-time monitoring. Documented results and prepared the project report & presentation.

CHAPTER 2

LITERATURE SURVEY

M. M. Doddamane et al., "Design and Implementation of IOT Enabled Smart Energy Meter," 2023 has implemented a smart energy meter that monitors real-time electrical parameters and uploads data to the cloud. It has been stated that the system utilizes three microcontrollers (Arduino Uno-1, Arduino Uno-2, and ESP8266) to measure voltage, current, power factor, frequency, and fault status. The authors have explained that the meter allows remote access via a mobile application, enabling users to track their energy consumption. The study has emphasized the advantages of cloud storage for energy data, though it has been noted that the mobile app only supports real-time monitoring without historical data visualization. It has also been pointed out that, while the hardware supports prepaid metering, the software has not fully implemented this feature. Nevertheless, they have concluded that the research demonstrates the effectiveness of IoT in energy monitoring

S. Kumar et al., "Utilization of loT and Smart Meters for Energy Management," *2023* has implemented an IoT-based Smart Energy Monitoring System (SEMS) that integrates smart meters with cloud-based platforms for efficient energy tracking. It has been stated that the system enables bidirectional communication between consumers and utilities, improving energy management. The authors have explained that the system collects real-time power consumption data and analyzes it using Entrack software However, it has been noted that the system has high internet dependency, making it ineffective during network disruptions. It has also been pointed out that the system lacks load control features, meaning it can only monitor but not manage energy consumption. The authors have acknowledged that the use of multiple microcontrollers increases hardware complexity and cost. Despite these drawbacks, they have concluded that IoT-based smart meters enhance energy efficiency and have suggested that future work could focus on reducing complexity, improving offline functionality, and integrating load optimization features.

Varadarajan et al., "IoT-Based Energy Meter Analysis Using Real-Time Data Monitoring," *2022* has implemented an IoT-based energy monitoring system that tracks and analyzes electricity consumption. It has been stated that the system uses a GSM module to transmit real-time energy data to an online portal, enabling remote monitoring. The authors have explained that each appliance is equipped with an energy meter, ensuring accurate power usage tracking. However, it has been noted that the system relies heavily on GSM communication, making it vulnerable to network failures. It has also been pointed out that the system lacks appliance control features, limiting it to monitoring only. Despite these drawbacks, the study has concluded that IoT-based energy monitoring enhances power optimization and energy efficiency.

G. Mehta et al., "A Novel IoT based Smart Energy Meter for Residential Energy Management in Smart Grid Infrastructure," *2021* has implemented a smart energy metering system to improve energy efficiency in households. It has been stated that the system integrates IoT technology with smart grid infrastructure, enabling real-time energy monitoring, data collection, and two-way communication between consumers and utility providers. The authors have explained that the smart meter measures voltage, current, power consumption, and energy usage and transmits the data to a cloud-based platform for remote access. They have mentioned that automated monitoring and data analytics help optimize electricity usage and reduce energy wastage. The study has emphasized that this system allows consumers to track their consumption patterns and make informed decisions about power usage. It has been noted that the system depends on a stable internet connection, which could limit its efficiency during network failures. Despite this, the authors have concluded that IoT-based smart meters are essential for future smart grids, contributing to energy conservation and intelligent power management.

R. Mishra et al., "Application of Internet of Things: Last meter smart grid and smart energy efficient system," *2020* This paper have implemented the application of the Internet of Things (IoT) in developing a last-meter smart grid and a smart energy-efficient system. It addresses challenges in traditional power grids, such as unidirectional energy flow, inefficiency, and lack of real-time monitoring. The proposed system integrates IoT with Raspberry Pi and wireless sensors to enable continuous monitoring, energy optimization, and remote control of appliances. A smart grid prototype is designed to track energy consumption, estimate bills, and upload data for consumer access. Additionally, a smart lighting system using Bluetooth and sensor-based automation enhances energy efficiency. The results demonstrate improved reliability, cost-effectiveness, and sustainability, making the system a step toward smarter energy management.

M. M. Haque et al., "IoT Based Smart Energy Metering System for Power Consumers," *2019* This paper has implemented an IoT-based smart energy metering system to enhance power management and efficiency for consumers. The system integrates smart meters with wireless communication to enable real-time monitoring and billing. It utilizes an ADE7758 energy measurement IC, Atmega32 microcontroller, and ESP12E Wi-Fi module for accurate data collection and transmission. Consumers can track their electricity usage via a web-based interface, while authorities can detect tampering and remotely disconnect services if needed. The proposed system reduces manual labor, minimizes energy theft, and improves billing accuracy. Experimental results confirm its effectiveness in providing reliable and cost-efficient energy management.

S. Saha et al., "Design and Implementation of IoT Based Smart Energy Meter," *2018* This paper has implemented an IoT-based smart energy meter using Arduino and a Wi-Fi module to enable real-time power monitoring. The system measures voltage, current, power, energy, and power factor, transmitting the data to a web interface and a mobile app for remote access. It eliminates the need for manual meter reading, ensuring accurate billing and reducing human errors. The system also helps in load management and forecasting by providing real-time consumption patterns. With improved transparency and efficiency, it supports smart grid integration. Experimental results confirm its accuracy, reliability, and cost-effectiveness.

D. B. Avancini et al., "A Flexible IoT Energy Monitoring Solution," *2018* This paper has implemented a flexible IoT-based energy monitoring system to improve energy management and efficiency. The proposed system uses a smart energy meter with multi-protocol communication capabilities, enabling real-time data collection, analysis, and remote monitoring. It measures key parameters like voltage, current, power, and energy, transmitting data via wired and wireless networks for better integration with smart environments. The system includes a centralized energy management platform that processes data, generates reports, and sends alerts for efficient energy control. With improved reliability, scalability, and cost-effectiveness, this solution supports intelligent energy networks and future smart grid applications

Chapter 3

System Implementation

3.1 BLOCK DIAGRAM

A block diagram for a smart electric meter typically includes several essential components to monitor and manage energy consumption efficiently. They help visualize complex processes in a clear and concise manner, aiding in communication and problem-solving. A block diagram as shown in Figure 3.1, includes several essential components designed manage electrical consumption.

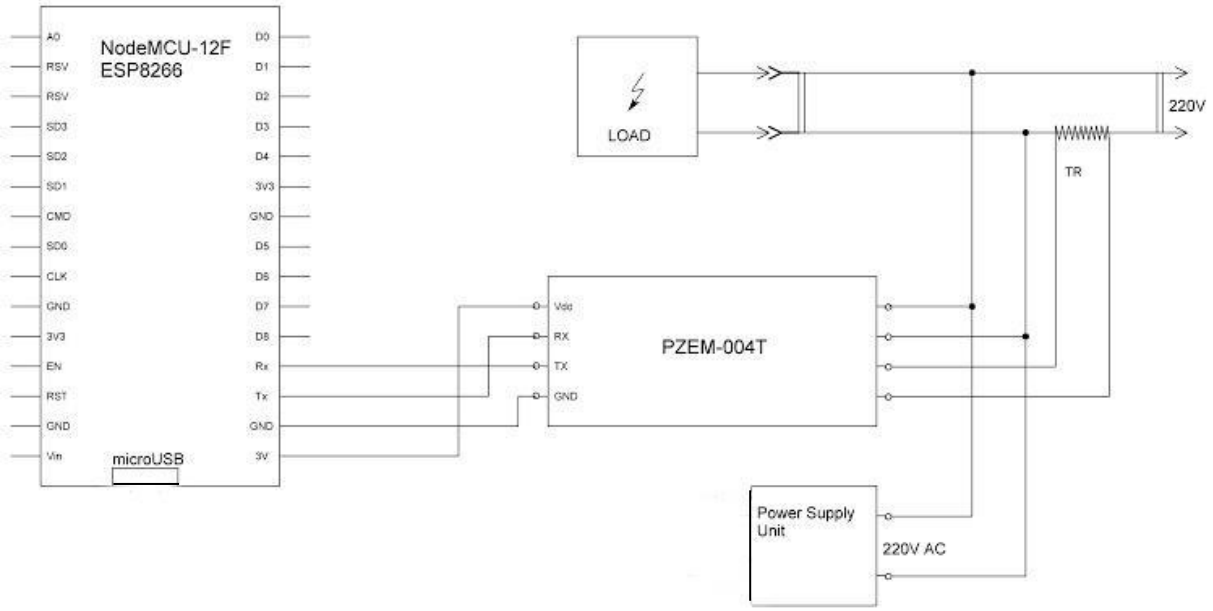

Figure 3.1: Block Diagram

3.2 COMPONENTS REQUIRED

Smart electric meter uses fewer components in order to decrease the complexity in the circuit connections and helps the users to have a cost-effective process. The components that are being used are listed below:

3.2.1 NODEMCU- ESP8266

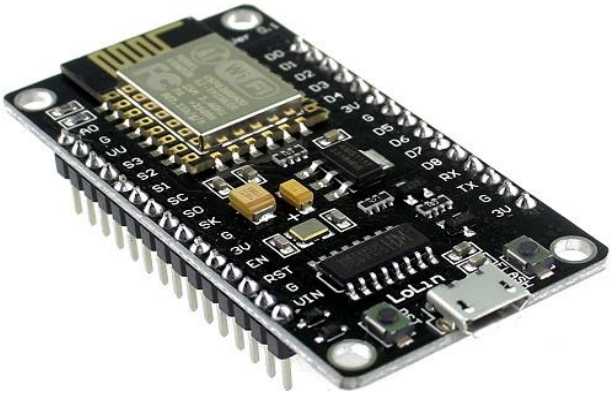

Figure 3.2.1: ESP8266

The **ESP8266** is a low-cost, highly-integrated microcontroller module with built-in Wi-Fi connectivity. Developed by Espressif Systems, the ESP8266 has become a popular choice for a variety of Internet of Things (IoT) applications due to its ease of use, flexibility, and affordability. It is a Wi-Fi-enabled microcontroller that allows devices to connect to a wireless network. Its primary advantage is the integration of both a microcontroller and a Wi-Fi transceiver in a single chip, making it ideal for low-power, small-form-factor devices that require wireless connectivity as shown in figure 3.2.1. The ESP8266 features a 32-bit microprocessor running at 80 MHz, which is capable of handling small to medium-scale applications. It typically comes with 512 KB to 4 MB of flash memory, which is used for storing program code and data. It Operates on a 3.3V power supply, and current consumption can vary from a few milliamps in sleep mode to over 200mA when active. Several variations of the ESP8266 are available, each suited to different needs in terms of size, GPIO pins, and power consumption, we are making use of the NODEMCU that features the ESP8266 chip along with a USB-to-serial converter, making it easier to connect to a computer for programming. The ESP8266 is one of the most affordable Wi-Fi modules available, making it a popular choice for IoT applications. Its small form factor makes it suitable for integration

into compact devices and projects. With support for the NODEMCU and other frameworks, programming the ESP8266 is accessible to both beginners and professionals.

3.2.2 PZEM-004T

Figure 3.2.2: PZEM-004T

The **PZEM-004T** is a widely-used energy monitoring module that measures key electrical parameters, such as voltage, current, power, and energy consumption. This module is designed for monitoring the real-time power consumption of electrical devices or systems. It's widely employed in IoT and smart home applications, where real-time energy monitoring is critical for managing energy efficiency. The module shown in figure 3.2.2, a part of the PZEM series for helpful for data transmission, making it suitable for both single-phase and three-phase power systems. This module is often used with microcontrollers like Arduino, ESP32, and ESP8266 for seamless integration into projects that require power monitoring. Measures voltage between 80V to 260V AC. Measures current up to 100A. Displays real-time active power in watts (W). It offers reasonable accuracy for energy monitoring applications,

with high precision in voltage, current, and power measurements. As AC current flows through the wire, it generates a magnetic field around the wire. The current coil is designed to detect this magnetic field and produce a proportional current that is easy to measure.

3.2.3 JUMPER WIRES

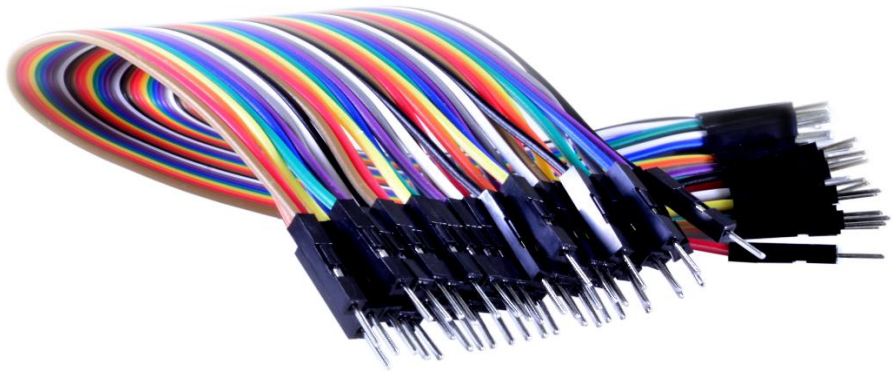

Figure 3.2.3: JUMPER WIRE

Jumper wires as shown in the figure 3.2.3, are short lengths of insulated wire used to make electrical connections between two points in a circuit. They are most commonly used in breadboards, prototyping boards, and circuit designs when creating or testing electronics projects**.** Jumper wires have insulation (usually plastic) that prevents short circuits and electrical interference. They come in different lengths, connector types, and colors to suit specific needs. Jumper wires allow for temporary connections in prototype circuits, so changes can be made quickly without soldering. Jumper wires come in various configurations, mainly distinguished by their connectors. The commonly used jumper wires are Male-to-Male, Female-to-Female, Male-to-Female. Wires are used in electronics, especially when testing and building circuits on a breadboard, jumper wires allow you to quickly change connections and adjust designs without needing to solder.

3.3 METHOD OF IMPLEMENTATION

The method for the smart electric meter outlines the approach and steps taken to design and deploy the system. This section provides a detailed explanation of the hardware and software components used, the design methodology, and the techniques employed to monitor and manage energy consumption. It covers the integration of the measurement unit, processing unit, communication module, and display system, along with the protocols for data transmission and remote monitoring.

3.3.1 WORKING

The PZEM-004T sensor is a versatile energy monitoring device that measures key electrical parameters such as voltage, current, power, and energy consumption. The PZEM-004T communicates this data via the UART (Universal Asynchronous Receiver-Transmitter) protocol, which is a widely used communication method for transferring data between microcontrollers or devices. This module is connected to the NodeMCU .

The NodeMCU ESP8266 microcontroller plays a crucial role in processing the raw data received from the PZEM-004T sensor. The Receiver pin of PZEM004T is connected to Transmitter of NodeMCU whereas Transmitter pin of PZEM004T is connected to Receiver of NodeMCU. The voltage of 5V is connected to D2 pin of ESP8266 and then they are grounded. The NodeMCU is equipped with a built-in Wi-Fi module that allows it to transmit and receive data over the internet. The data received from the PZEM-004T is in a raw format, which is not human-readable. The NodeMCU processes the incoming data, converts it into useful values such as watts, volts, and kWh, making it easier for users to understand their energy usage. This conversion often involves mathematical algorithms that translate the sensor’s signals into standard electrical units.

Once the data is processed, the NodeMCU sends it to the Blynk Cloud server. Blynk is an Internet of Things (IoT) platform that allows users to build mobile applications for monitoring and controlling IoT devices. Through its mobile app, users can access real-time data about their energy consumption, such as the voltage (V), current (A), power (W), and energy usage (kWh). The NodeMCU establishes a Wi-Fi connection with the internet, and via the Blynk cloud server, the data is relayed to the Blynk mobile app, making it accessible on smartphones and other devices. This seamless transfer of data ensures that users can continuously monitor their energy consumption, track patterns, and analyze their electrical usage from anywhere, at any time.

The integration of these components allows users to gain a deeper insight into their energy usage in real-time. With the Blynk app, energy consumption data becomes not only accessible but also actionable. Users can use this information to make informed decisions about energy efficiency, control appliances remotely , and potentially reduce their electricity bills by being more mindful of how much power they consume. This combination of the PZEM-004T sensor, NodeMCU, and Blynk app represents a modern, efficient solution for home or industrial energy management. The integration of these components allows users to gain a deeper insight into their energy usage in real-time. With the Blynk app, energy consumption data becomes not only accessible but also actionable. Users can use this information to make informed decisions about energy efficiency, control appliances remotely, and potentially reduce their electricity bills by being more mindful of how much power they consume. This combination of the PZEM-004T sensor, NodeMCU, and Blynk app represents a modern, efficient solution for home or industrial energy management.

3.3.2 FLOWCHART

The flowchart of the implementation of the smart electric meter is shown in Figure 3.4 for a better understanding of its working.

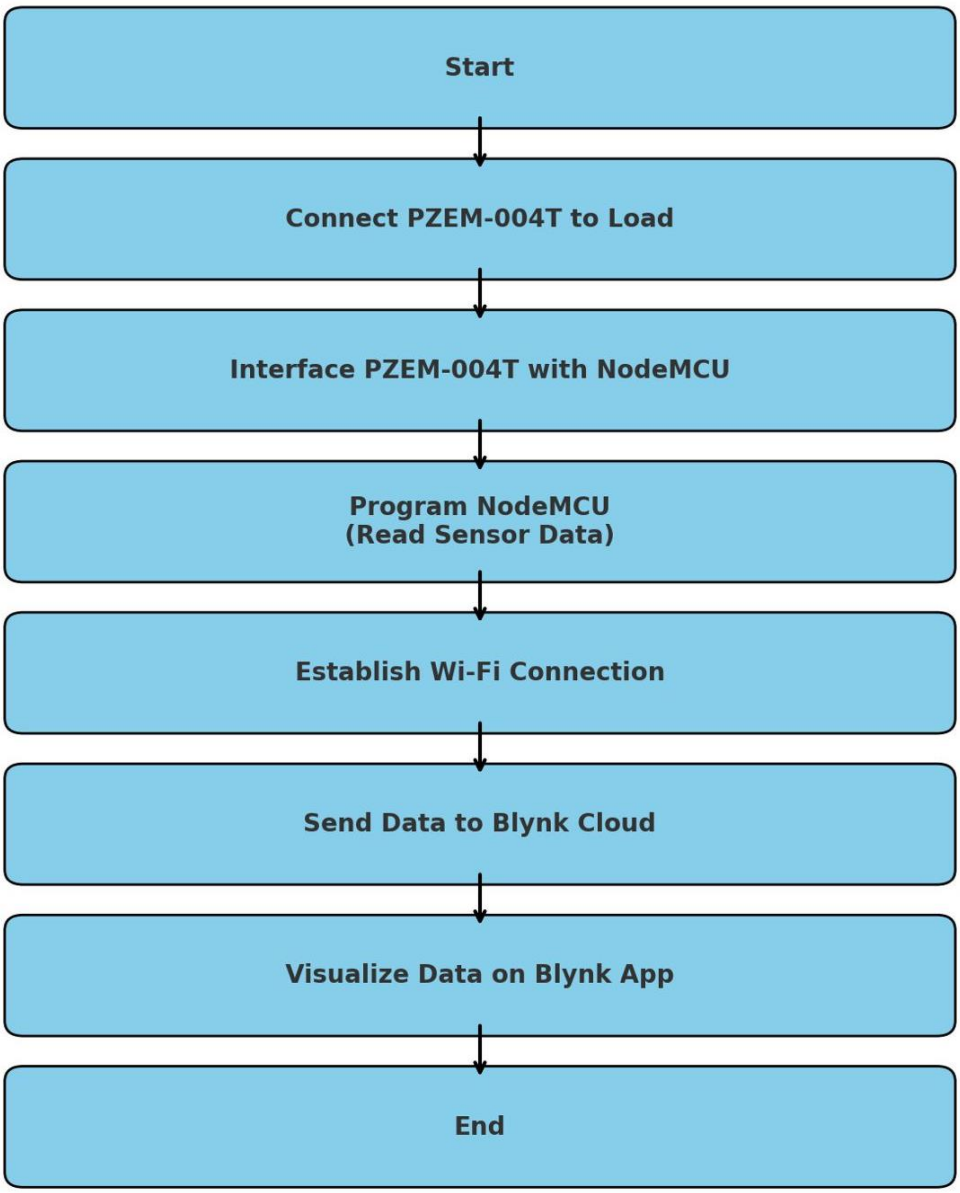

Figure 3.3.2: FLOWCHART

CHAPTER 4

Result Analysis and Discussion

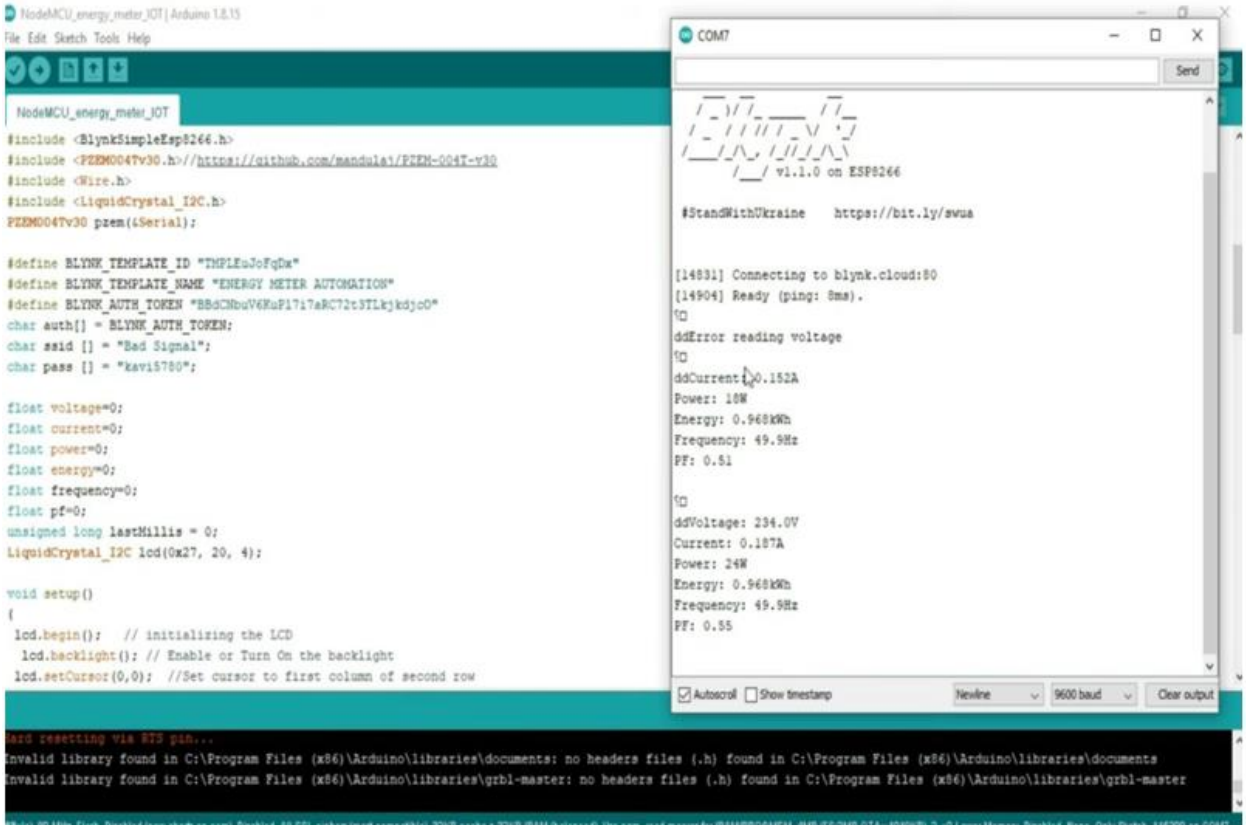

The smart electric meter system effectively monitors real-time electrical parameters using a NodeMCU (ESP8266) with IoT integration. It measures important values such as voltage, current, power consumption (in watts), energy usage (in kWh), frequency, and power factor. These readings are displayed on the serial monitor and continuously updated for accurate tracking.

The system is connected to the Blynk cloud platform, allowing the data to be accessed remotely through a mobile application. This enables users to monitor energy consumption anytime, improve energy efficiency, detect abnormalities, and make informed decisions for better power management.

4.1 ADVANTAGES

1. Real-Time Monitoring: The smart energy meter continuously measures voltage, current, power, and energy consumption. Data is instantly processed and displayed on the Blynk app via ESP8266.

2. Remote Access: The ESP8266 transmits data wirelessly, allowing users to monitor energy usage from any location with internet access. The Blynk app provides a user-friendly interface to view real-time and historical data.

3. Environmental Benefits: Users can identify and eliminate inefficient appliances consuming excess . it Encourages people to adopt energy-saving habits, leading to lower electricity demand.

4.2 DISADVANTAGES

1. Internet Dependency: The ESP8266 transmits data wirelessly to the Blynk cloud, requiring a stable internet connection. If the Wi-Fi is slow, unstable, or disconnected, the system: Fails to send real-time energy data to the user's mobile application, Delays alerts or notifications about abnormal power usage, Limits remote monitoring, forcing users to check the meter manually.

2. Privacy & Security Concerns: Since energy data is sent over the internet, it can be vulnerable to hacking or unauthorized access. Hackers may access energy consumption data, revealing usage patterns (e.g., when the house is occupied or empty). If not properly secured, attackers can manipulate data or disrupt power monitoring. Since data is stored on cloud platforms like Blynk, weak encryption could lead to unauthorized data access.

4.3 APPLICATIONS

Residential energy monitoring.

Industrial energy management.

Smart grid systems.

Renewable energy integration.

Real-time energy billing.

4.4 CONCLUSION

This system allows users to track power consumption, optimize energy usage, and reduce electricity costs, contributing to smarter and more sustainable energy management. The integration of IoT technology enables seamless data transmission, making energy monitoring more accessible and user-friendly. However, challenges such as internet dependency, security concerns, and power supply limitations need to be addressed for improved reliability. Overall, this project demonstrates a practical approach to modern energy monitoring, paving the way for future innovations in smart home automation and industrial energy management.

4.5 FUTURE SCOPE

1.AI & Machine Learning Integration – Predict energy consumption patterns and suggest optimization strategies.

2.Renewable Energy Integration – Monitor solar and wind energy alongside grid power.

3.Enhanced Security Measures – Implement encryption and blockchain for secure data transmission.

4.Industrial & Commercial Applications – Scale up for factories, offices, and smart cities

4.6 REFERENCES

1. M. M. Doddamane, S. S. P. S, S. Amoji, V. M. G and G. H. Reddy, "Design and Implementation of IOT Enabled Smart Energy Meter," *2023 7th International Conference on Design Innovation for 3 Cs Compute Communicate Control (ICDI3C)*, Karnataka, India, 2023.

2. S. Kumar, K. Suneetha and A. Gill, "Utilization of loT and Smart Meters for Energy Management," *2023 International Conference on Power Energy, Environment & Intelligent Control (PEEIC)*, Greater Noida, India, 2023

3. Varadarajan, T. Babu, P. M and P. Nivedhitha, "IoT-Based Energy Meter Analysis Using Real-Time Data Monitoring," *2022 1st International Conference on Computational Science and Technology (ICCST)*, CHENNAI, India, 2022.

4. G. Mehta, R. Khanam and V. K. Yadav, "A Novel IoT based Smart Energy Meter for Residential Energy Management in Smart Grid Infrastructure," *2021 8th International Conference on Signal Processing and Integrated Networks (SPIN)*, Noida, India, 2021.

5. R. Mishra, A. Pandey and J. Savariya, "Application of Internet of Things: Last meter smart grid and smart energy efficient system," *2020 First International Conference on Power, Control and Computing Technologies (ICPC2T)*, Raipur, India, 2020.

6. M. M. Haque, Z. H. Choudhury and F. M. Alamgir, "IoT Based Smart Energy Metering System for Power Consumers," *2019 2nd International Conference on Innovation in Engineering and Technology (ICIET)*, Dhaka, Bangladesh, 2019.

7. S. Saha, S. Mondal, A. Saha and P. Purkait, "Design and Implementation of IoT Based Smart Energy Meter," *2018 IEEE Applied Signal Processing Conference (ASPCON)*, Kolkata, India, 2018.

8. D. B. Avancini, S. G. B. Martins, R. A. L. Rabelo, P. Solic and J. J. P. C. Rodrigues, "A Flexible IoT Energy Monitoring Solution," *2018 3rd International Conference on Smart and Sustainable Technologies (SpliTech)*, Split, Croatia, 2018.